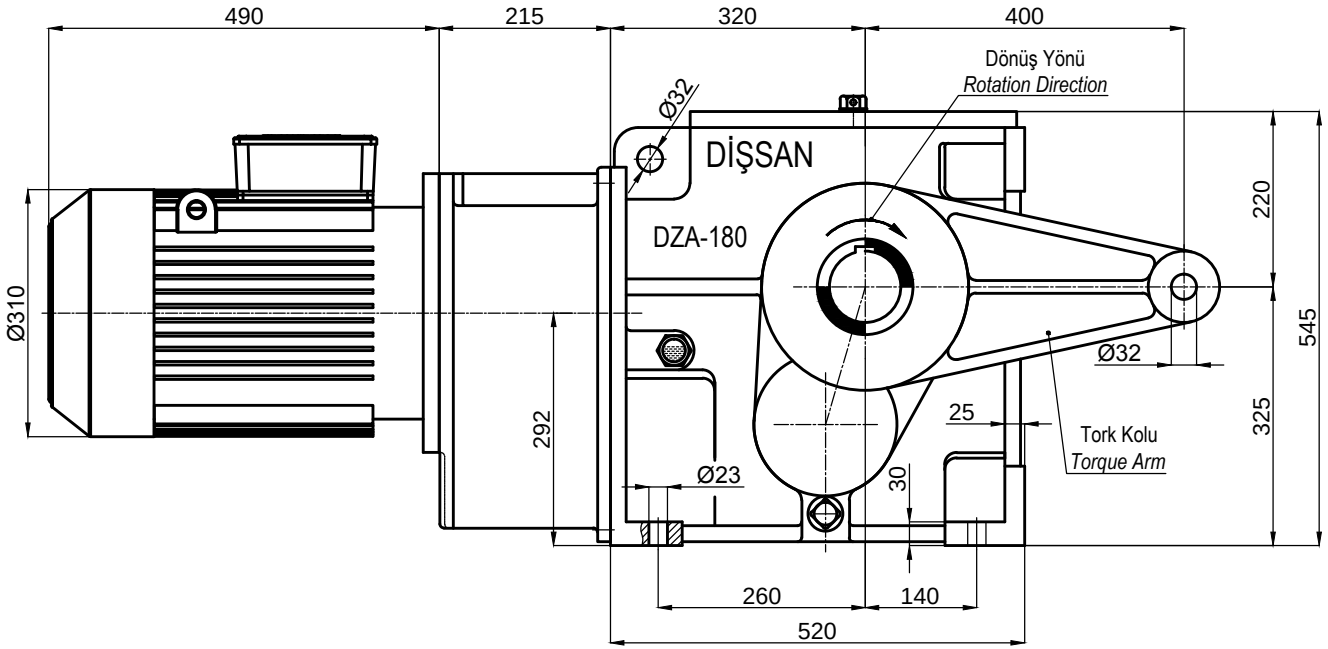


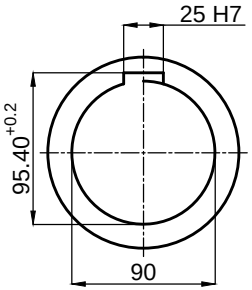


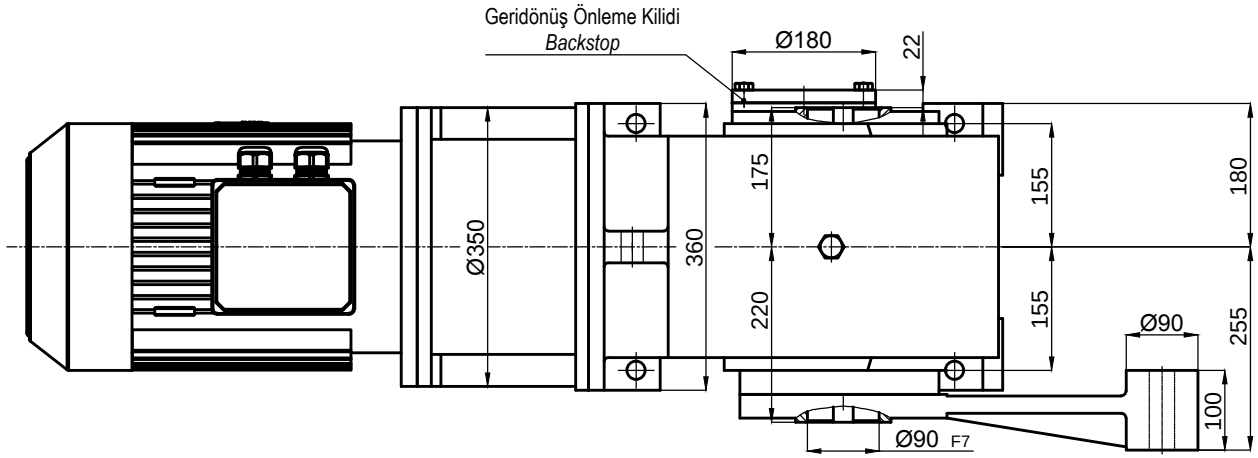


| | İsim / *Name* | Tarih / *Date* | HELİSEL VE KONİK DİŞLİLİ, MİLE GEÇME , IEC B5 FLANŞLI MOTOR ADAPTÖRLÜ, TORK KOLLU, MOTORLU, KİLİTLİ REDÜKTÖR<br>*HELICAL-BEVEL GEAR UNITS, SHAFT MOUNTED, WITH IEC B5 MOTOR ADAPTER,WITH TORQUE ARM, WITH MOTOR, WITH BACKSTOP* | | | | Dişsan |
|---|---|---|---|---|---|---|---|
| Çizen / *Drawer* | - | - | | | | | |
| Kontrol / *Control* | - | - | Resim No / *Drawing No* | **DZGNM3-180.K21-T1/160M** | | | |
| Onay / *Approve* | - | - | Malzeme / *Material* | - | Adet / *Quantity* | - | Ölçek / *Scale* 1/8 A4 |

FR.07.31 REV.01/22.07.2013