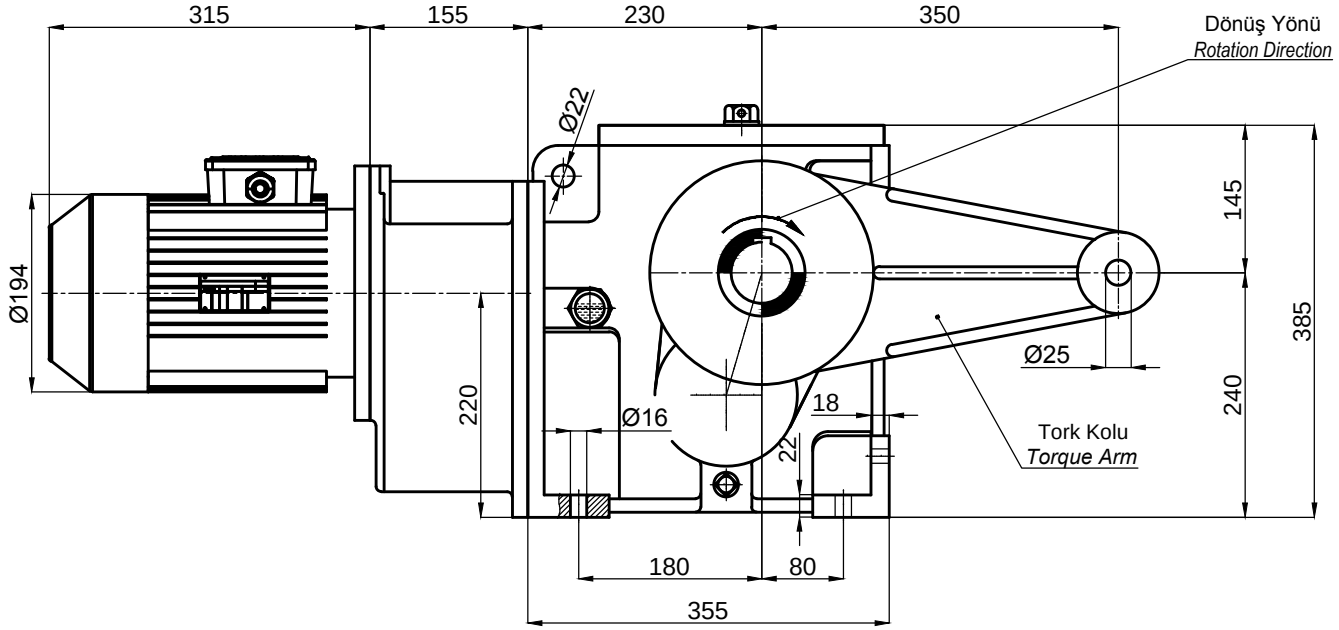

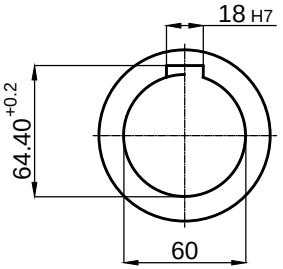

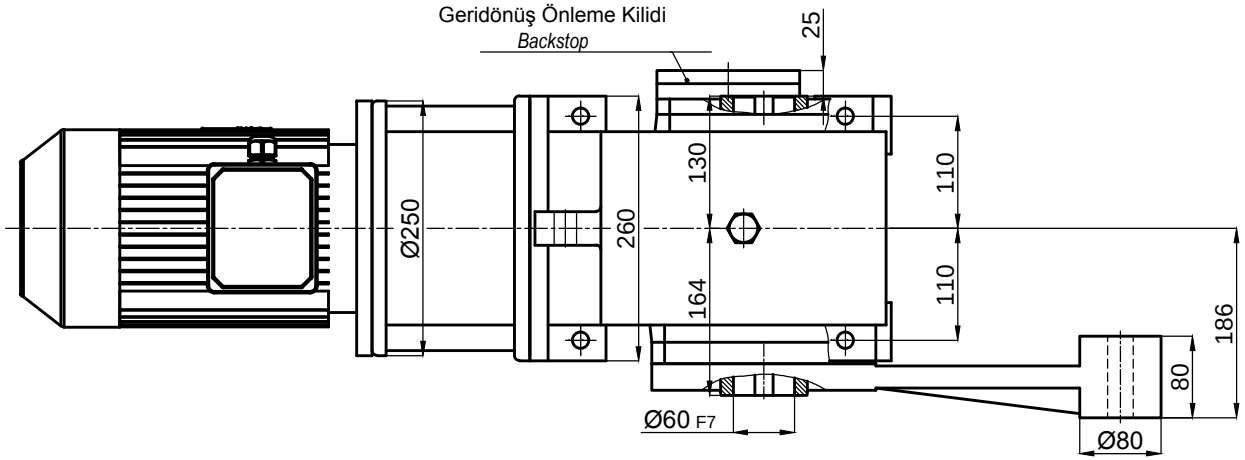

	İsim / Name	Tarih / Date	HELİSEL VE KONİK DİŞLİLİ, MİLE GEÇME , IEC B5 FLANŞLI MOTOR ADAPTÖRLÜ, TORK KOLLU, MOTORLU, KİLİTLİ REDÜKTÖR *HELICAL-BEVEL GEAR UNITS, SHAFT MOUNTED, WITH IEC B5 MOTOR ADAPTER,WITH TORQUE ARM, WITH MOTOR, WITH BACKSTOP*			Dişsan
Çizen / Drawer	-	-			
Kontrol / Control	-	-	Resim No / Drawing No	**DZGNM3-125.K21-T1/100L**	
Onay / Approve	-	-	Malzeme / Material -	Adet / Quantity -	Ölçek / Scale 1/7.5 A4

FR.07.31 REV.01/22.07.2013