FR.07.31 REV.01/22.07.2013

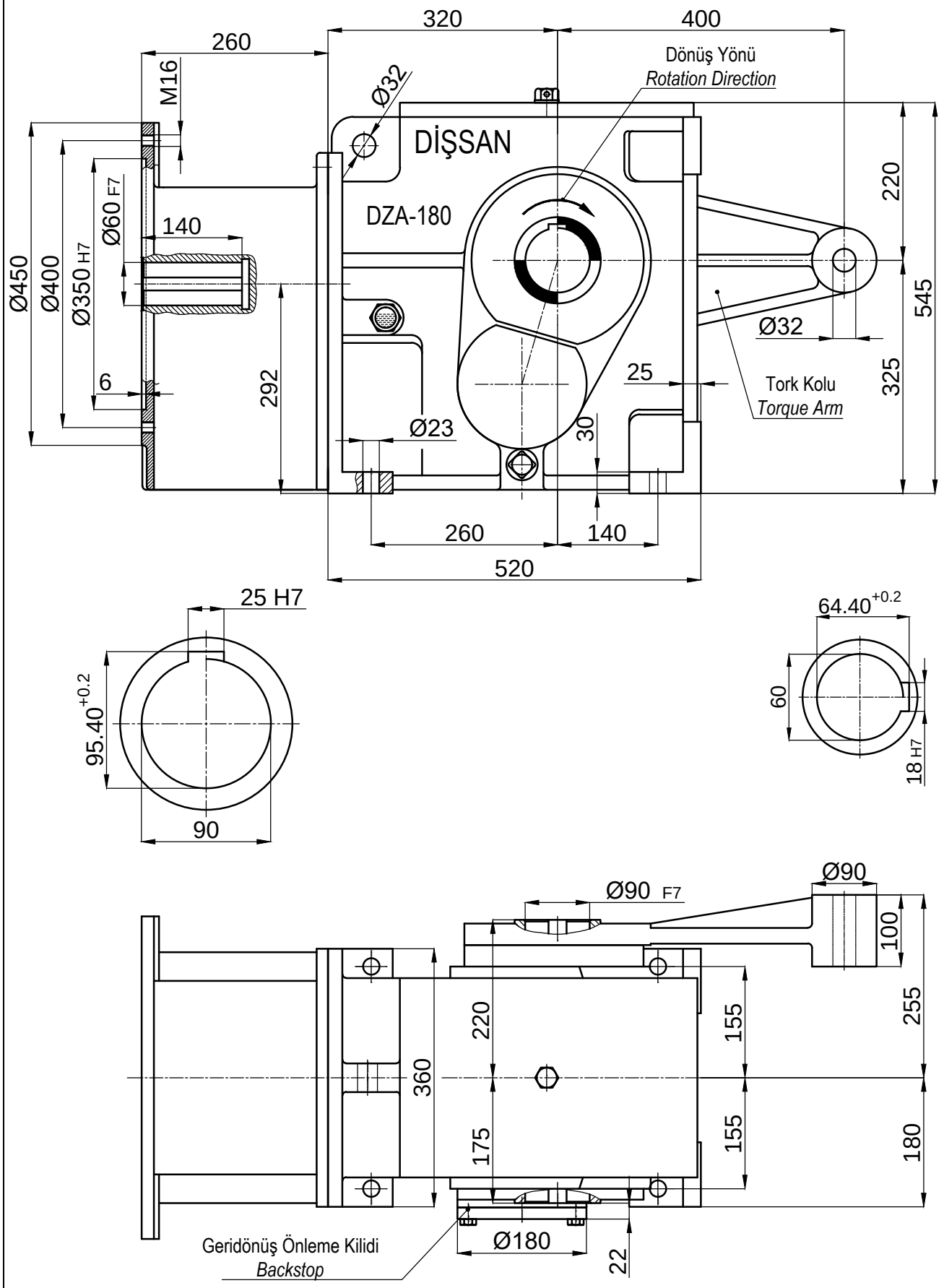

	İsim / *Name*	Tarih / *Date*	HELİSEL VE KONİK DİŞLİLİ, MİLE GEÇME , IEC B5 FLANŞLI MOTOR ADAPTÖRLÜ, TORK KOLLU, MOTORSUZ, KİLİTLİ REDÜKTÖR *HELICAL-BEVEL GEAR UNITS, SHAFT MOUNTED, WITH IEC B5 MOTOR ADAPTER,WITH TORQUE ARM, WITHOUT MOTOR, WITH BACKSTOP*				Dişsan	
Çizen / *Drawer*	-	-						
Kontrol / *Control*	-	-	Resim No / *Drawing No*	**DZGN3-180.K11-T2/225**				
Onay / *Approve*	-	-	Malzeme / *Material*	-	Adet / *Quantity*	-	Ölçek / *Scale* 1/1	A4