FR.07.31 REV.01/22.07.2013

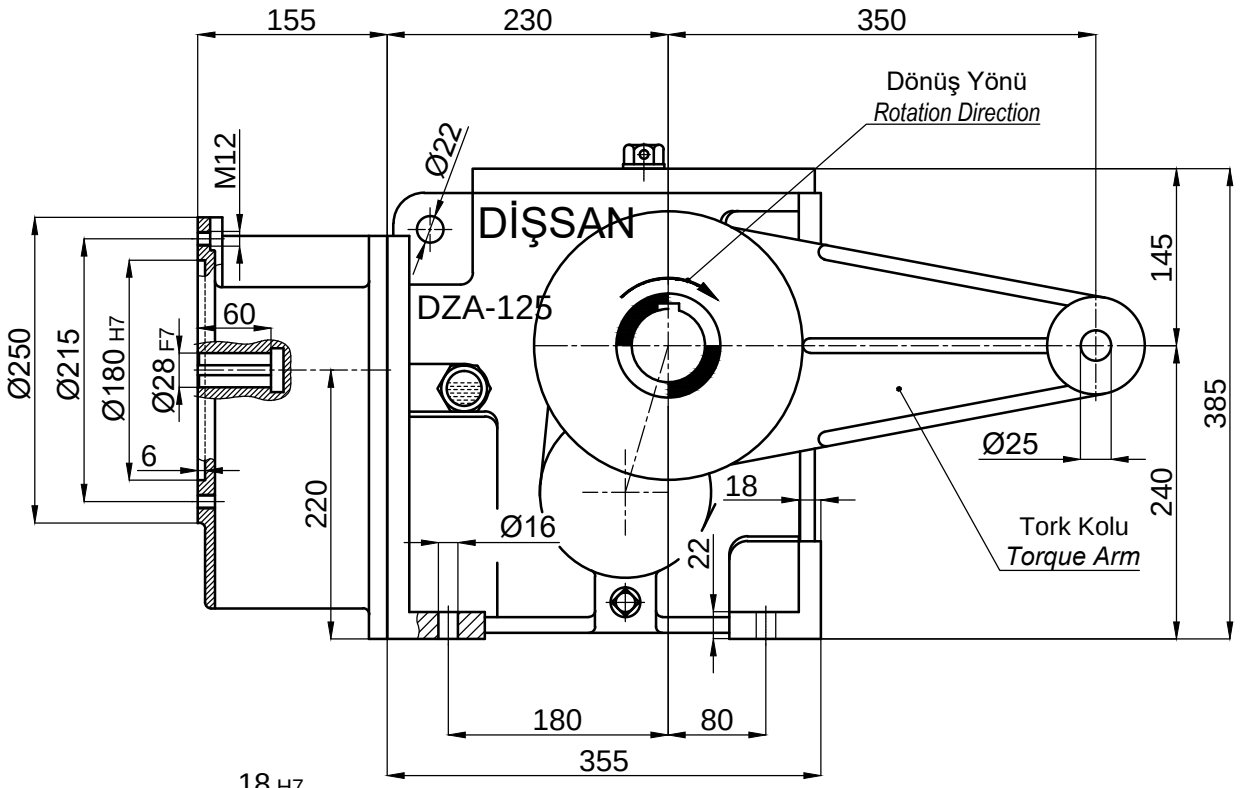

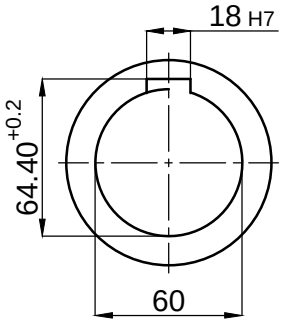

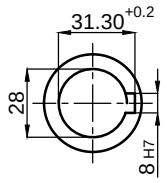

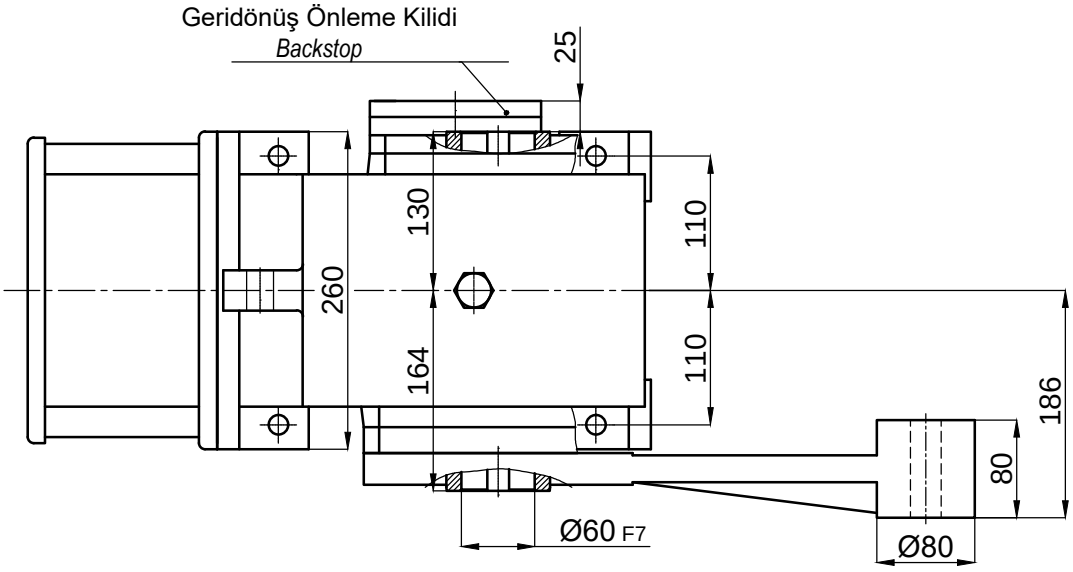

	İsim / Name	Tarih / Date	HELİSEL VE KONİK DİŞLİLİ, MİLE GEÇME , IEC B5 FLANŞLI MOTOR ADAPTÖRLÜ, TORK KOLLU, MOTORSUZ, KİLİTLİ REDÜKTÖR *HELICAL-BEVEL GEAR UNITS, SHAFT MOUNTED, WITH IEC B5 MOTOR ADAPTER,WITH TORQUE ARM, WITHOUT MOTOR, WITH BACKSTOP*				
Çizen / Drawer	-	-					Dişsan
Kontrol / Control	-	-	Resim No / Drawing No	**DZGN3-125.K21-T1/100**			
Onay / Approve	-	-	Malzeme / Material	-	Adet / Quantity	-	Ölçek / Scale 1/1 A4