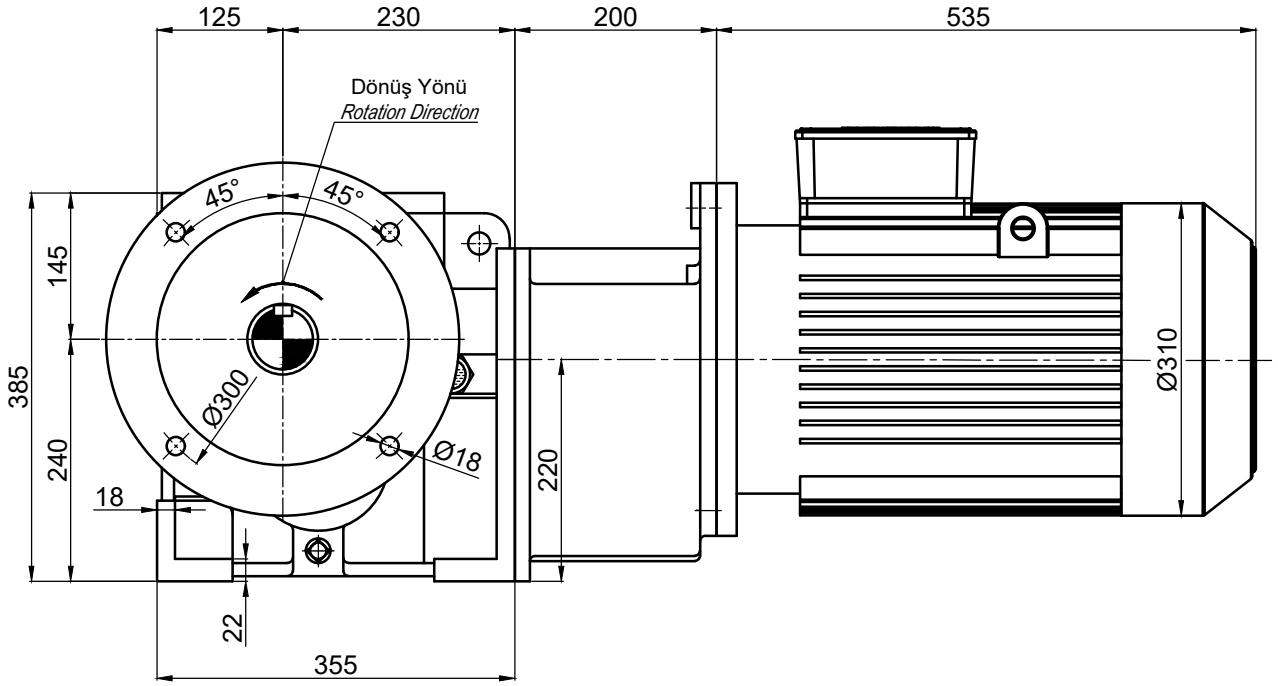


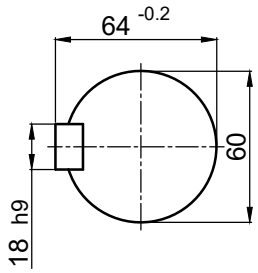


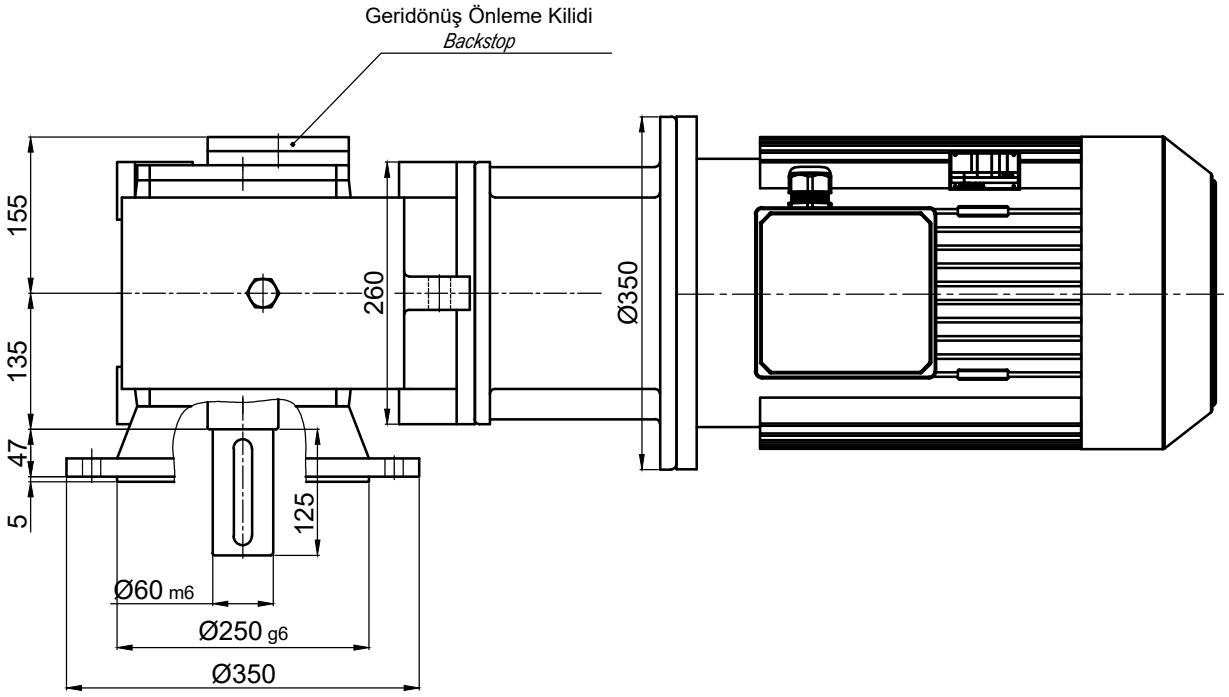


| | İsim / *Name* | Tarih / *Date* | HELİSEL VE KONİK DİŞLİLİ, DOLU MİLLİ, IEC B5 MOTOR ADAPTÖRLÜ, MOTORLU , FLANŞLI,KİLİTLİ REDÜKTÖR<br>*HELICAL-BEVEL GEAR UNITS, SOLID OUTPUT SHAFT, WITH IEC B5 MOTOR ADAPTER ,FLANGE MOUNTED, WITH MOTOR,WITH BACKSTOP* | | | | | |
|---|---|---|---|---|---|---|---|---|
| Çizen / *Drawer* | | | | | | | Dişsan | |
| Kontrol / *Control* | - | - | Resim No / *Drawing No* | **DZDNMF3-125.K11/160L** | | | | |
| Onay / *Approve* | - | - | Malzeme / *Material* | - | Adet / *Quantity* | - | Ölçek / *Scale* - | A4 |